REV	DESCRIPTION	DRW.	DATE
01.1	初版发行	G.X.Y	2025.06.25

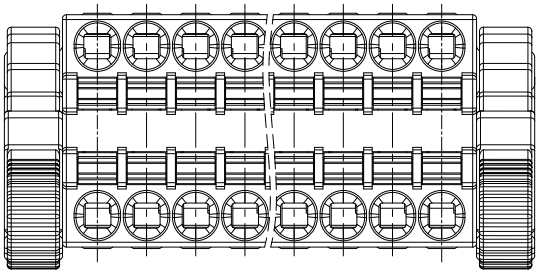

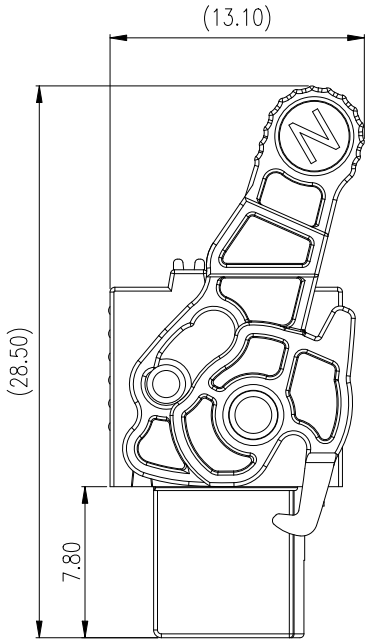

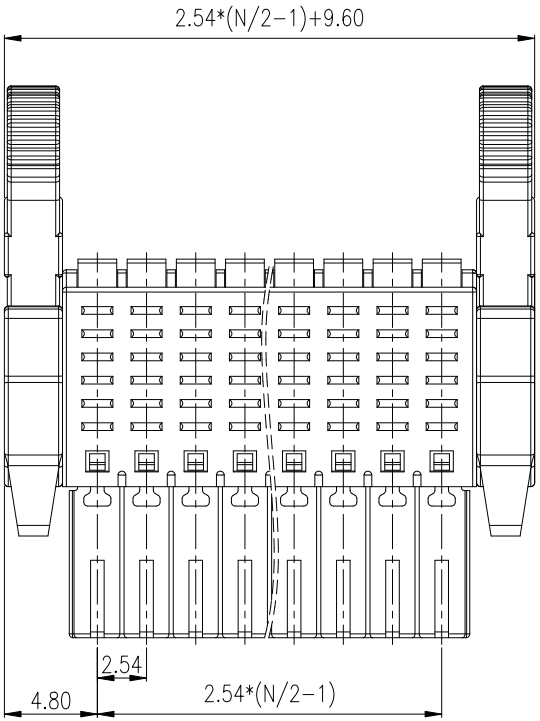

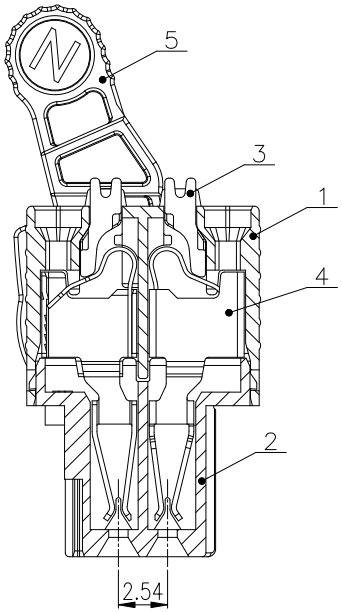

Notes/备注:

1. Electrical properties/电气特性

UL Standard/UL标准

Use Group/应用组别	B	C	D
Rated Voltage/额定电压 (V)	150	/	/
Rated Current/额定电流 (A)	5	/	/
Withstanding voltage/工频耐电压	AC 1300V/1Min		

IEC Standard/IEC标准

Rated Voltage/额定电压(V): 320

Rated Current/额定电流(A): 6

Overvoltage Category/过电压类别 /Pollution Degree/污染等级	II/2	III/2	III/3
Voltage/电压 (V)	320	160	160
Rated Impulse Voltage/冲击耐电压(KV)	2.5	2.5	2.5

2. Connection data/连接数据

Wire range/线径范围(AWG/mm²): 30~20/0.2~0.5

Stripping length/剥线长度(mm): 8~9

3. Environmental safety/环境安全

Operating temperature/工作温度范围(℃): -40~+105

RoHS compliant/符合RoHS环保要求

料号 \ 颜色	1/棕	2/红	3/橙	4/黄	5/绿	6/蓝	7/紫	8/灰	9/白	A/黑
L045P050XX										A001
L045P020XX										A001
L045P03000										3002
L006P10000										3002

ITEM	NAME OF PART	NO. OF PART	Q"TY	MATERIAL	NOTES
5	F7GT-3.5-旋钮	L006P10000	2	PA66-GF	UL94 V-0
4	F7ND-2.54-夹片	L045M01100	N	Stainless steel+ Phosphor bronze	Sn Plated
3	F7ND-2.54-按钮	L045P03000	N	PA66+GF30	UL94 V-0
2	F7ND-2.54-XXP-盖板	L045P020XX	1	PA66	UL94 V-0
1	F7NDT-2.54-XXP-主体	L045P050XX	1	PA66	UL94 V-0

Nominal dimension Tolerances (mm)								∠	⌯	⊥	—		//
0 to 18	over 18 to 30	over 30 to 50	over 50 to 80	over 80 to 120	over 120 to 180	over 180 to 250	over 250 to 320	all	all	all	over 0 to 100	over 100 to 150	over 150
0.2	+0.25	+0.3	+0.4	+0.5	+0.65	+0.8	+1	+1.5°	0.3	0.3	0.3	0.4	0.6

APP. M.X.B	DATE: 2025.06.25	PART NO.: F7NDT-2.54-XXP-X	
CHK. M.C.N	DATE: 2025.06.25		
DRW. G.X.Y	DATE: 2025.06.25	DARWING TYPE: Production Drawing	
PROJECTION		UNITS: mm	SCALE: 3.5:1 SHEET/OF: 1/1

AINEWELL 苏州凯若思电子有限公司 SUZHOU CANRENS ELECTRONICS CO.,LTD

A3