REV	DESCRIPTION	DRW.	DATE
00	初版发行	T.P.W	2023.10.25

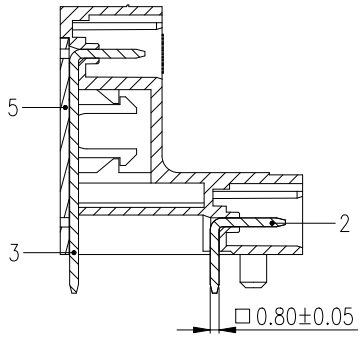

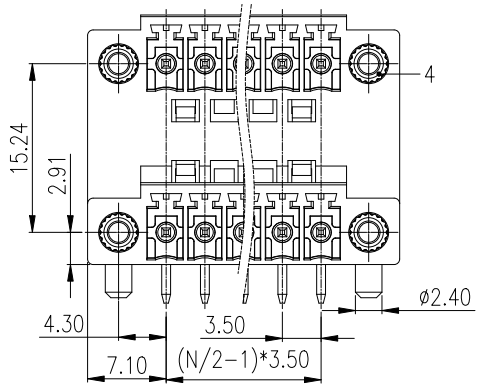

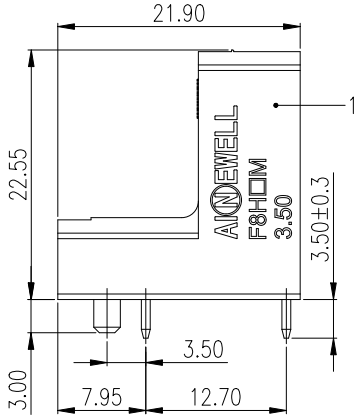

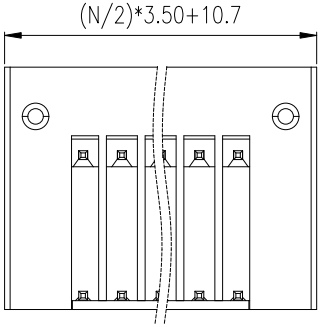

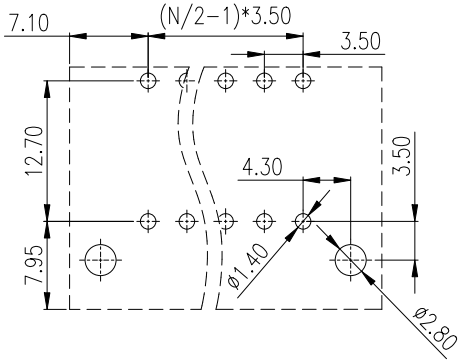

Notes/备注:

1. Electrical properties/电气特性

UL Standard/UL标准

Use Group/应用组别	B	C	D
Rated Voltage/额定电压 (V)	300	/	300
Rated Current/额定电流 (A)	8	/	8
Withstanding voltage/工频耐电压	AC 1600V/1Min		

IEC Standard/IEC标准

Rated Voltage/额定电压(V): 320

Rated Current/额定电流(A): 10

Overvoltage Category/过电压类别 /Pollution Degree/污染等级	II/2	III/2	III/3
Voltage/电压 (V)	320	160	160
Rated Impulse Voltage/冲击耐电压(KV)	2.5	2.5	2.5

3. Environmental safety/环境安全

Operating temperature/工作温度范围(℃): −40~+105

RoHS compliant/符合RoHS环保要求

Part No./料号说明:

F8HDM−3.5−XXP−SCX

Poles/P数

04: 4Poles
06: 6Poles
...
48: 48Poles

Color/颜色

1: Brown/棕色
2: Red/红色
3: Orange/橙色
4: Yellow/黄色
5: Green/绿色
6: Blue/蓝色
7: Purple/紫色
8: Grey/灰色
9: White/白色
A: Black/黑色

ITEM	NAME OF PART	MATERIAL	NOTES
5	COVER 盖板	PA66	UL94 V−0
4	NUT 螺母	Copper Alloy	/
3	PIN HEADER 焊针	Copper Alloy	Sn Plated
2	PIN HEADER 焊针	Copper Alloy	Sn Plated
1	HOUSING 主体	PA66	UL94 V−0

Nominal dimension Tolerances (mm)							
0 to 18	over 18 to 30	over 30 to 50	over 50 to 80	over 80 to 120	over 120 to 180	over 180 to 250	over 250 to 320
±0.25	±0.3	±0.35	±0.5	±0.7	±0.9	±1.0	±1.2

APP.	DATE:	PART NO.: F8TRM-3.5-XXP-SCX	
CHK.	DATE:		
DRW. T.P.W	DATE: 2023.10.25	DARWING TYPE: Customer Drawing	
PROJECTION		UNITS: mm	SCALE: 2:1 / SHEET/OF: 1/1

AINEWELL 昆山艾尼维尔电子有限公司
KUN SHAN AINEWELL ELECTRONICS CO.,LTD

A3