REV	DESCRIPTION	DRW.	DATE
00	初版发行	M.C.N	2022.08.05

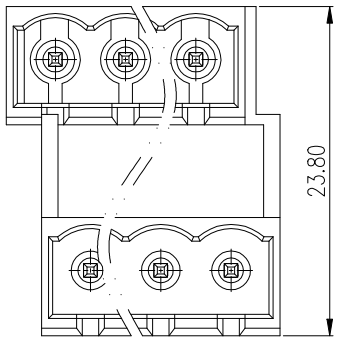

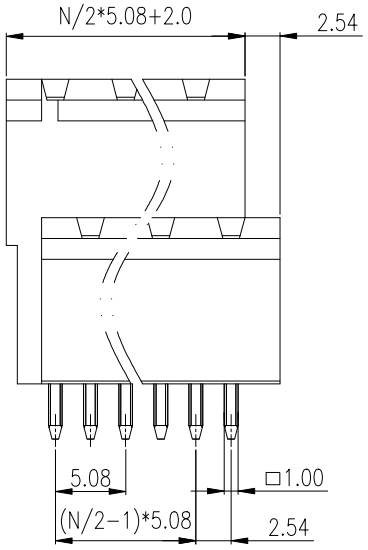

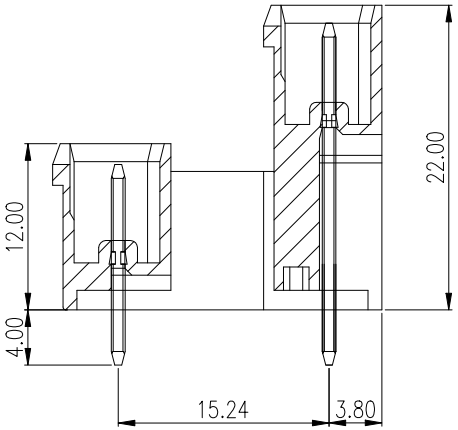

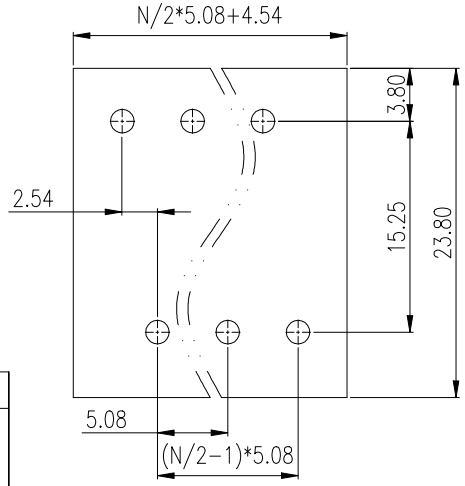

PCB. LAYOUT

Notes/备注:

1. Electrical properties/电气特性

UL Standard/UL标准

Use Group/应用组别	B	C	D
Rated Voltage/额定电压 (V)	300	/	300
Rated Current/额定电流 (A)	15	/	10
Withstanding voltage/工频耐电压	AC 2500V/1Min		

IEC Standard/IEC标准

Rated Voltage/额定电压(V): 300

Rated Current/额定电流(A): 16

Overvoltage Category/过电压类别 /Pollution Degree/污染等级	II/2	III/2	III/3
Voltage/电压 (V)	630	320	250
Rated Impulse Voltage/冲击耐电压(KV)	4	4	4

2. Environmental safety/环境安全

Operating temperature/工作温度范围(℃): −40~+105

RoHS compliant/符合RoHS环保要求

Part No./料号说明:

F8HVTC−5.08−XXP−X−W01

Poles/P数

02: 2Poles
04: 4Poles
...
48: 48Poles

Color/颜色

1: Brown/棕色
2: Red/红色
3: Orange/橙色
4: Yellow/黄色
5: Green/绿色
6: Blue/蓝色
7: Purple/紫色
8: Grey/灰色
9: White/白色
A: Black/黑色

Nominal dimension Tolerances (mm)							
0 to 18	over 18 to 30	over 30 to 50	over 50 to 80	over 80 to 120	over 120 to 180	over 180 to 250	over 250 to 320
±0.25	±0.3	±0.35	±0.5	±0.7	±0.9	±1.0	±1.2

APP.	DATE:	PART NO.: F8HVTC-5.08-XXP-X-W01		
CHK.	DATE:			
DRW. M.C.N	DATE: 2022.08.05	DARWING TYPE: Customer Drawing		
PROJECTION		UNITS: mm	SCALE: 2:1	SHEET/OF: 1/1

AINEWELL 昆山艾尼维尔电子有限公司
KUN SHAN AINEWELL ELECTRONICS CO.,LTD

A3