REV	DESCRIPTION	DRW.	DATE
00	初版发行	M.C.N	2022.06.06

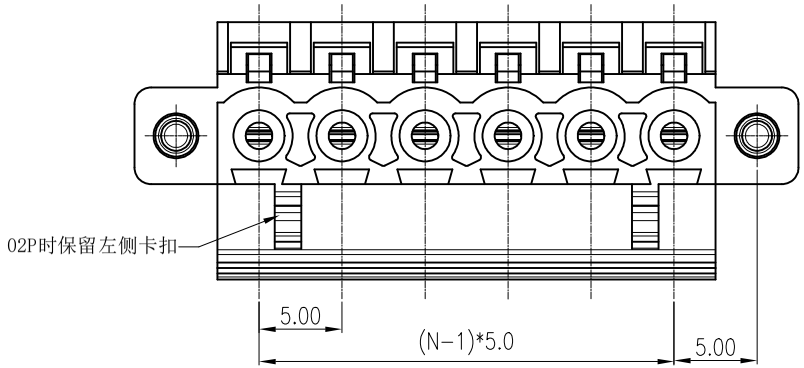

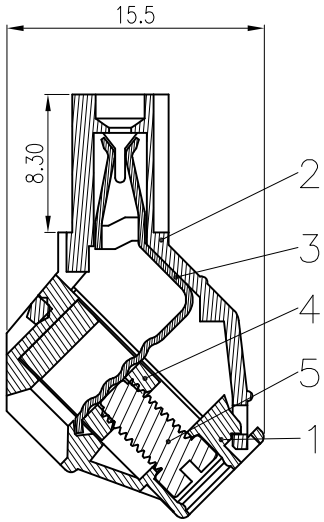

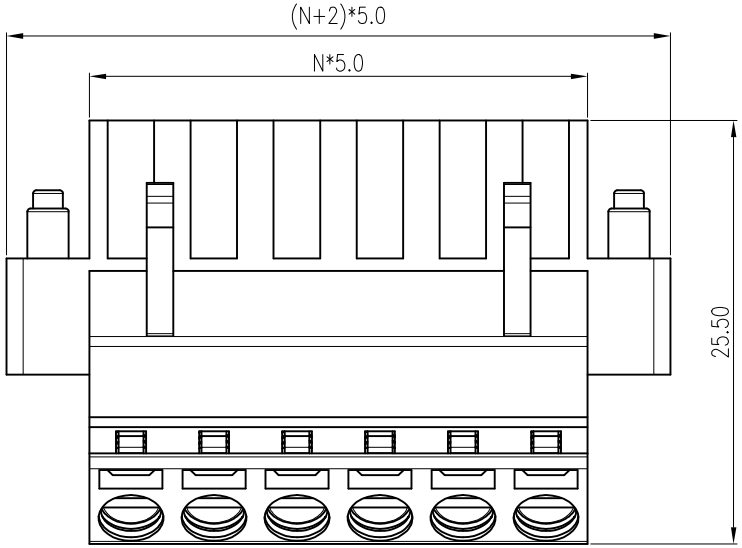

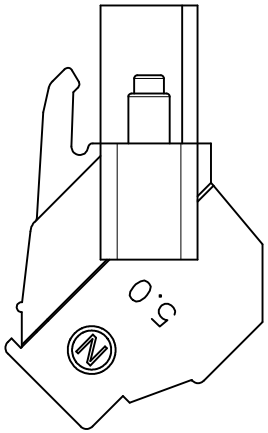

Notes/备注:

1. Electrical properties/电气特性

UL Standard/UL标准

Use Group/应用组别	B	C	D
Rated Voltage/额定电压 (V)	300	/	300
Rated Current/额定电流 (A)	15	/	10
Withstanding voltage/工频耐电压	AC 1600V/1Min		

IEC Standard/IEC标准

Rated Voltage/额定电压(V): 320

Rated Current/额定电流(A): 16

Overvoltage Category/过电压类别 /Pollution Degree/污染等级	II/2	III/2	III/3
Voltage/电压 (V)	630	320	250
Rated Impulse Voltage/冲击耐电压(KV)	4	4	4

2. Connection data/连接数据

Wire range/线径范围(AWG/mm²): 28~12/0.2~2.5

Stripping length/剥线长度(mm): 7~8

Wire tightening torque/锁线扭矩(N.m): 0.5~0.6

3. Environmental safety/环境安全

Operating temperature/工作温度范围(℃): -40~+105

RoHS compliant/符合RoHS环保要求

ITEM	NAME OF PART	MATERIAL	NOTES
6	SCREW 螺丝	Steel	M2.5/Zn Plated
5	SCREW 螺丝	Steel	M3/Zn Plated
4	CAGE 方块	Brass	Ni Plated
3	CLAMP 夹片	Phosphor bronze	Sn Plated
2	COVER 盖板	PA66	UL94 V-0
1	HOUSING 主体	PA66	UL94 V-0

Part No./料号说明:

F6AFM-5.0-XXP-1-X

Poles/P数

02: 2Poles
03: 3Poles
...
24: 24Poles

Color/颜色

1: Brown/棕色
2: Red/红色
3: Orange/橙色
4: Yellow/黄色
5: Green/绿色
6: Blue/蓝色
7: Purple/紫色
8: Grey/灰色
9: White/白色
A: Black/黑色

Nominal dimension Tolerances (mm)							
0 to 18	over 18 to 30	over 30 to 50	over 50 to 80	over 80 to 120	over 120 to 180	over 180 to 250	over 250 to 320
±0.25	±0.3	±0.35	±0.5	±0.7	±0.9	±1.0	±1.2

APP. M.X.B	DATE: 2022.06.06	PART NO.: F6AFM-5.0-XXP-1-X	
CHK. C.W	DATE: 2022.06.06		
DRW. M.C.M	DATE: 2022.06.06	DARWING TYPE: Customer Drawing	
PROJECTION		UNITS: mm	SCALE: 3:1 / SHEET/OF: 1/1

AINEWELL 昆山艾尼维尔电子有限公司
KUN SHAN AINEWELL ELECTRONICS CO.,LTD

A3