REV	DESCRIPTION	DRW.	DATE
00	初版发行	C.W	2023.09.18
01	增加UL logo	M.C.N	2025.10.30

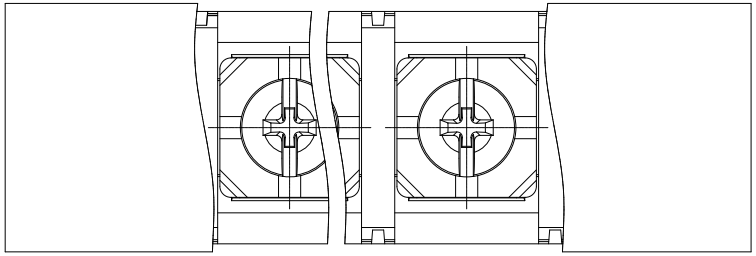

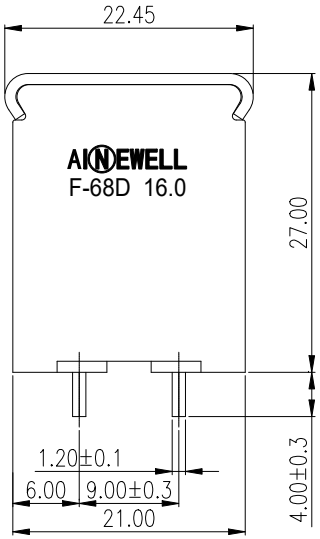

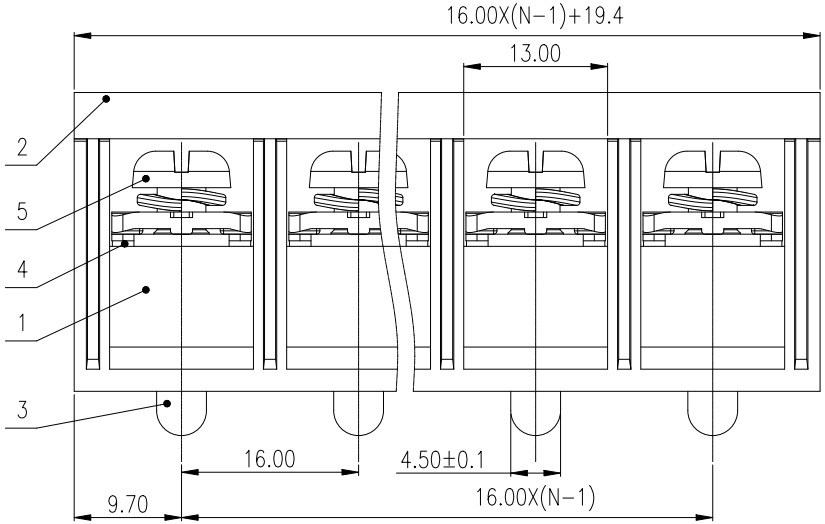

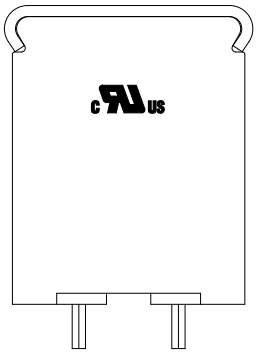

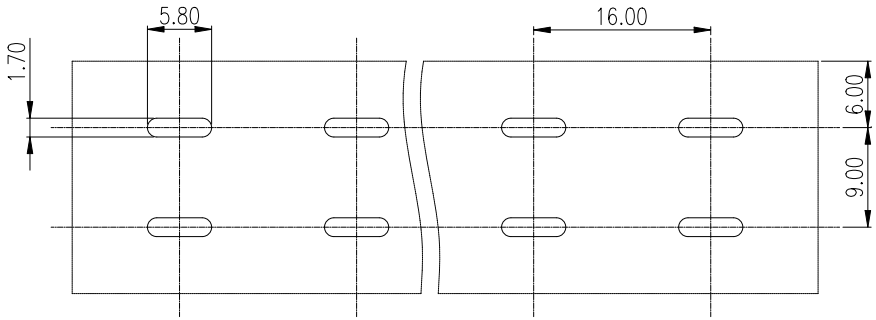

PCB LAYOUT

Part No./料号说明:

F-68D-16.0-XXP-C

Poles/P数
02: 2Poles
03: 3Poles
...
20: 20Poles

Notes/备注:

1. Electrical properties/电气特性

UL Standard/UL标准

Use Group/应用组别	B	C	D
Rated Voltage/额定电压 (V)	600	600	600
Rated Current/额定电流 (A)	100	100	5
Withstanding voltage/工频耐电压	AC 2500V/1Min		

IEC Standard/IEC标准

Rated Voltage/额定电压(V): 1000

Rated Current/额定电流(A): 101

Overvoltage Category/过电压类别 /Pollution Degree/污染等级	II/2	III/2	III/3
Voltage/电压 (V)	1000	1000	800
Rated Impulse Voltage/冲击耐电压(KV)	8	8	8

2. Connection data/连接数据

Wire range/线径范围(AWG/mm²): 14~3/2.5~25

Stripping length/剥线长度(mm): 13~14

Wire tightening torque/导线扭矩(N.m): 2.0~2.4

3. Environmental safety/环境安全

Operating temperature/工作温度范围(℃): -40~+105

RoHS compliant/符合RoHS环保要求

ITEM	NAME OF PART	MATERIAL	NOTES
5	SCREW 螺丝	Steel	M5/Ni Plated
4	NUT 螺母	Steel	M5/Zn Plated
3	SOLDER PIN 端子	Copper Alloy	Sn Plated
2	COVER 透明盖	PC	
1	HOUSING 主体	PA66	BLACK/UL94 V-0

Nominal dimension Tolerances (mm)							
0 to 18	over 18 to 30	over 30 to 50	over 50 to 80	over 80 to 120	over 120 to 180	over 180 to 250	over 250 to 320
±0.25	±0.3	±0.35	±0.5	±0.7	±0.9	±1.0	±1.2

APP.	DATE:	PART NO.: F-68D-16.0-XXP-C	
CHK.	DATE:		
DRW. C.W	DATE: 2023.09.18	DARWING TYPE: Customer Drawing	
PROJECTION		UNITS: mm	SCALE: 2:1 SHEET/OF: 1/1

AINEWELL 昆山艾尼维尔电子有限公司
KUN SHAN AINEWELL ELECTRONICS CO.,LTD

A3