REV	DESCRIPTION	DRW.	DATE
00	初版发行	T.P.W	2024.02.29

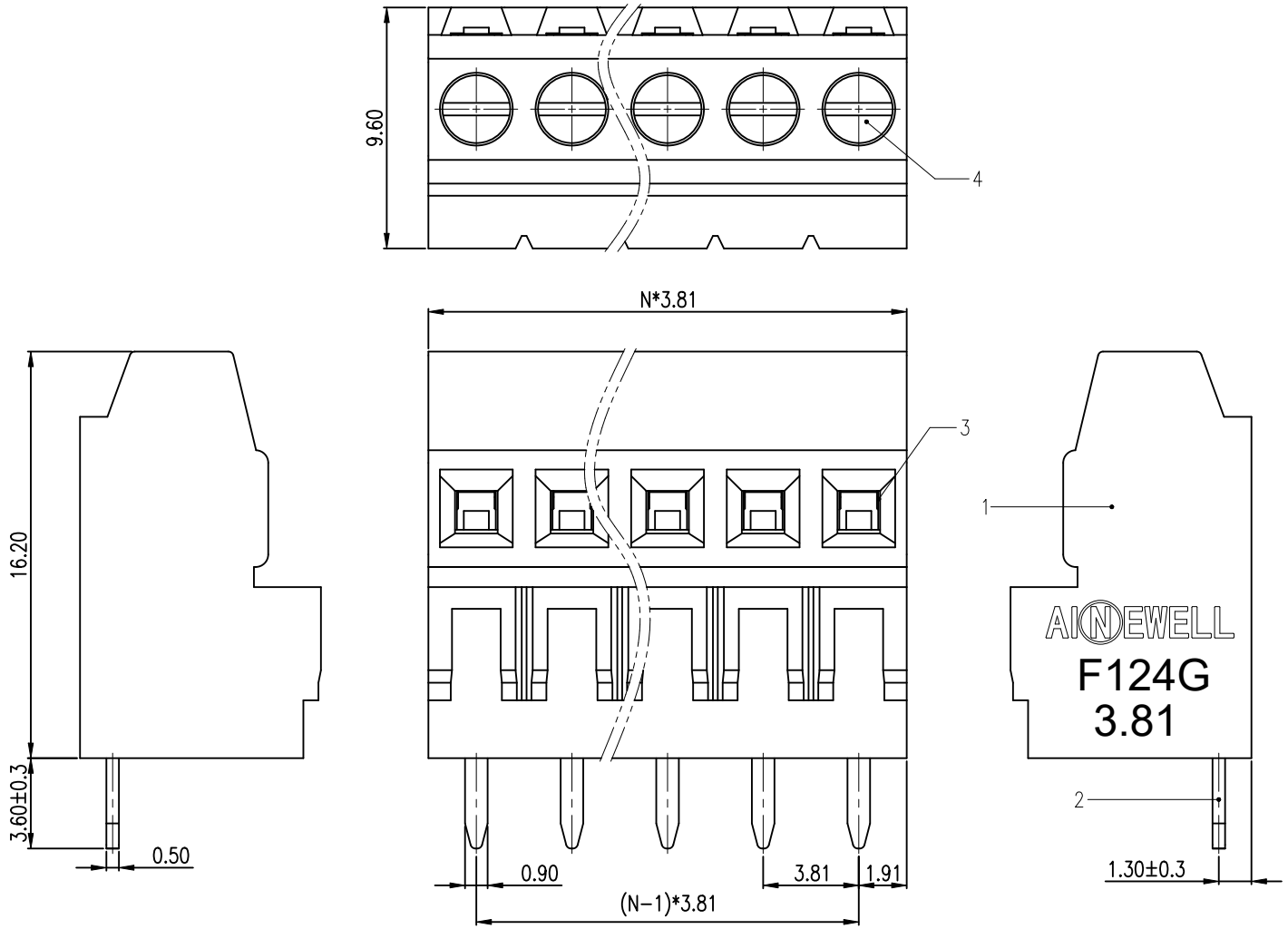

Notes/备注:

1. Electrical properties/电气特性

UL Standard/UL标准

Use Group/应用组别	B	C	D
Rated Voltage/额定电压 (V)	300	/	/
Rated Current/额定电流 (A)	10	/	/
Withstanding voltage/工频耐电压	AC 1600V/1Min		

IEC Standard/IEC标准

Rated Voltage/额定电压(V): 160

Rated Current/额定电流(A): 12

Overvoltage Category/过电压类别 /Pollution Degree/污染等级	II/2	III/2	III/3
Voltage/电压 (V)	320	160	160
Rated Impulse Voltage/冲击耐电压(KV)	2.5	2.5	2.5

2. Connection data/连接数据

Wire range/线径范围(AWG/mm²): 30~16/0.2~1.0

Stripping length/剥线长度(mm): 5~6

Wire tightening torque/导线扭矩(N.m): 0.2

3. Environmental safety/环境安全

Operating temperature/工作温度范围(℃): −40~+105

RoHS compliant/符合RoHS环保要求

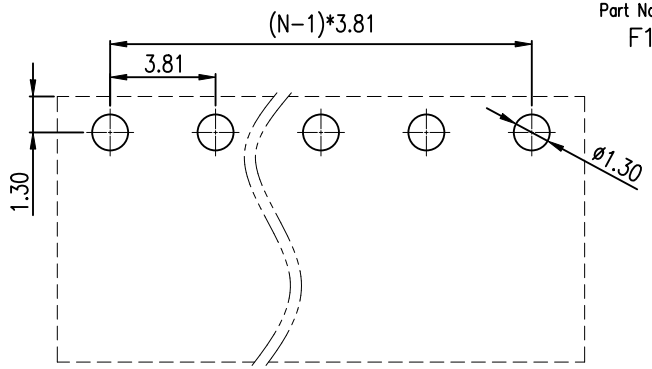

PCB LAYOUT

Part No./料号说明:

F124G−3.81−XXP−1−X

Poles/P数
02: 2Poles
03: 3Poles
...
16: 16Poles

Color/颜色
1: Brown/棕色
2: Red/红色
3: Orange/橙色
4: Yellow/黄色
5: Green/绿色
6: Blue/蓝色
7: Purple/紫色
8: Grey/灰色
9: White/白色
A: Black/黑色

ITEM	NAME OF PART	MATERIAL	NOTES
4	SCREW 螺丝	Steel	M2/Ni Plated
3	Cage 方块	Copper alloy	Ni Plated
2	PIN HEADER 焊针	Copper Alloy	Sn Plated
1	HOUSING 主体	PA66	Black/UL94 V-0

Nominal dimension Tolerances (mm)							
0 to 18	over 18 to 30	over 30 to 50	over 50 to 80	over 80 to 120	over 120 to 180	over 180 to 250	over 250 to 320
±0.25	±0.3	±0.35	±0.5	±0.7	±0.9	±1.0	±1.2

APP.	DATE:	PART NO.: F124G-3.81-XXP-1-X	
CHK.	DATE:		
DRW. T.P.W	DATE: 2024.02.29	DARWING TYPE: Customer Drawing	
PROJECTION		UNITS: mm	SCALE: 5:1 / SHEET/OF: 1/1

AINEWELL 昆山艾尼维尔电子有限公司
KUN SHAN AINEWELL ELECTRONICS CO.,LTD

A3